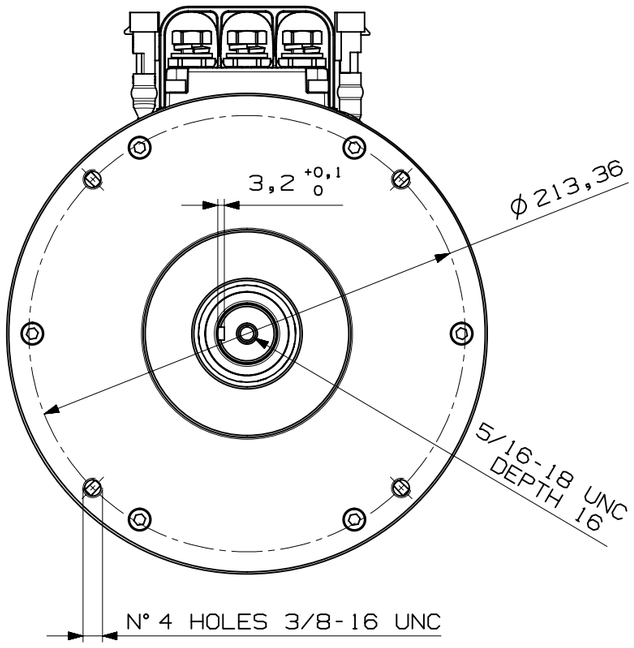

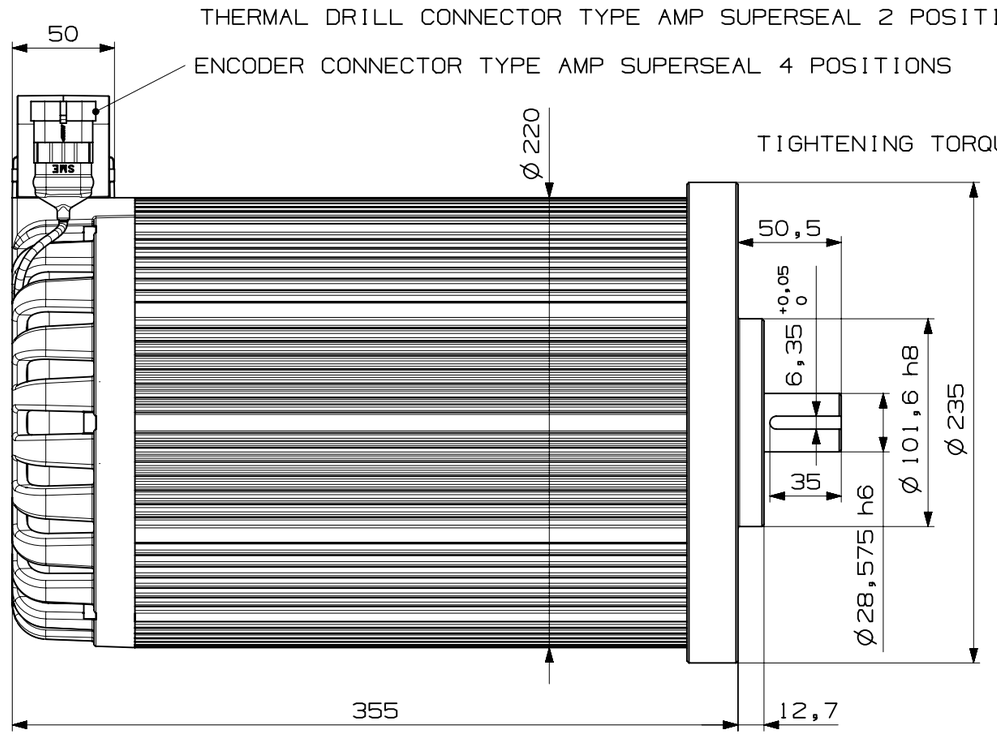

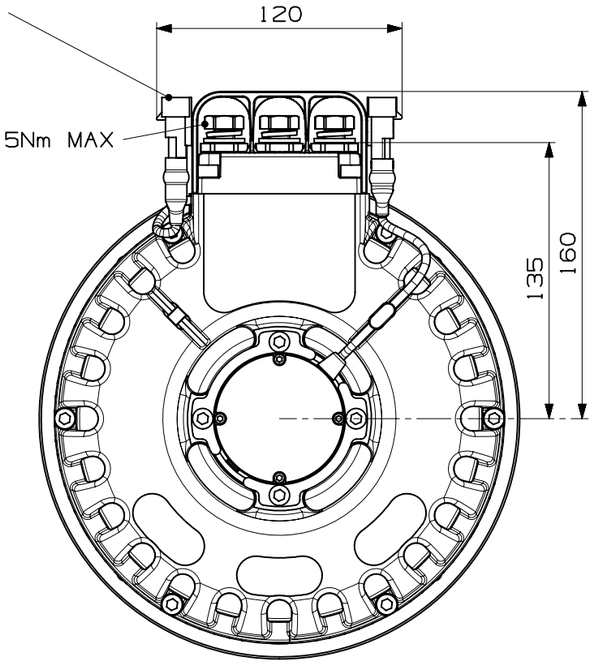

COMPONENT	CODE
ROTOR	MT1754B
STATOR	MT1757B
WINDING	MT1759B
FRONT COVER	MT1756A
REAR COVER	MT614B

POSITION SENSOR	
PIN 1	VCC
PIN 2	SINE
PIN 3	COSINE
PIN 4	GND

Rev.	Modification	Date	Signature

Scale: 1:3

MEDIUM LIMIT OF ACCURACY	UP TO 6	BESIDES 6 UP TO 30	BESIDES 30 UP TO 120	BESIDES 120 UP TO 315	BESIDES 315 UP TO 1000	BESIDES 1000 UP TO 2000	BESIDES 2000 UP TO 4000	REFERENCE MINOR ANGLE SIDE: UP TO 10	BESIDES 10 UP TO 50	BESIDES 50 UP TO 120	BESIDES 120 UP TO 400
DEVIATION	±0,1	±0,2	±0,3	±0,5	±0,8	±1,2	±2	±1°	±0° 30'	±0° 20'	±0° 10'
TOLERANCE	0,2	0,4	0,6	1	1,6	2,4	4	2°	1°	0° 40'	0° 20'

DRAWN WITH CAD HANDLING ON CAD SYSTEM ONLY

THIS DRAWING IS OUR EXCLUSIVE PROPERTY. IT CAN NOT BE COPIED, REPRODUCED, TRANSMITTED TO OTHER PEOPLE OR USED IN ANY WAY WITHOUT OUR CONSENT. ANY INFRINGEMENT WILL BE LEGALLY PURSUED.

SME

Drawn A.C.

Approved A.C.

Date 03/03/17

Product Code: B00MT1746B00

Substitute Product Code:

Product Description: IPM00I225-90T100/54

Drawing Code: MT1746B

Sheet of